rutec LIGHTDESIGN GmbH | Carl-Zeiss-Str. 13 | 28857 Syke

TEL +49 4242 / 84034 - 0 | E-MAIL INFO@RUTECLIGHTDESIGN.DE | WWW.RUTECLIGHTDESIGN.DE

VARDAflex Platin Wallwasher Q 3D

3000K 15x25° SU-EK Flex.LED-Strip, 24V, 24W/m, 3000K 3D, 15x25°, W

Article nr.: SPGF325

Flexible LED Stripe sealed in UV-, chlorine-, · salt water-, solvent- and heat-resistant special silicone · for indoor- and outdoor use, IP67 · · cuttable every 250 mm / 7 LEDs · number of LEDs per meter: 28 · LED pitch: 35.71 mm · beam angle: 15x25° · CRI: >80 · luminous flux per meter: 2400 lm · voltage: 24V DC · power per meter: 24 W · lifespan L70B50: >= 36.000 h · WxH in mm: 35 x 25 · · Temperature range: -40 to +55°C · Processing temperature: +10 to +55°C · Maximum length per connection: 5 metres (max. 2 metres production length) · Bending diameter horizontal: 800 mm, vertical: 400 mm · anti-wicking ferrule diameter = 12 mm: the anti-wicking ferrule is located at · 115 mm from the connector on the cable.

TECHNICAL DATA

Unit Code	metre
BAR code	4251835873253
Housing colour	Weiss
Width	35.00 mm
Height	25.00 mm
LED colour	ca. 3000K warmweiß
Lightoutput per LED	85.71 lm
Lamp	including LED
IP rating	67
Voltage	24 V

rutec LIGHTDESIGN GmbH | Carl-Zeiss-Str. 13 | 28857 Syke

TEL +49 4242 / 84034 - 0 | E-MAIL INFO@RUTECLIGHTDESIGN.DE | WWW.RUTECLIGHTDESIGN.DE

VARDAflex Platin Wallwasher Q 3D

3000K 15x25° SU-EK Flex.LED-Strip, 24V, 24W/m, 3000K 3D, 15x25°, W

Article nr.: SPGF325

TECHNICAL DATA

Material	Kunststoff
Temperature range	-40 - 55
LED per meter	28
Dimension of segments	250.00 mm
Energy ffficiency class	EEK-Label_F
CRI	≥ 80
Lifetime L70B50	36.000 h
Suitable light source	

rutec LIGHTDESIGN GmbH | Carl-Zeiss-Str. 13 | 28857 Syke
TEL +49 4242 / 84034 - 0 | E-MAIL INFO@RUTECLIGHTDESIGN.DE | WWW.RUTECLIGHTDESIGN.DE

VARDAflex Platin Wallwasher Q 3D

3000K 15x25° SU-EK Flex.LED-Strip, 24V, 24W/m, 3000K 3D, 15x25°, W

Article nr.: SPGF325
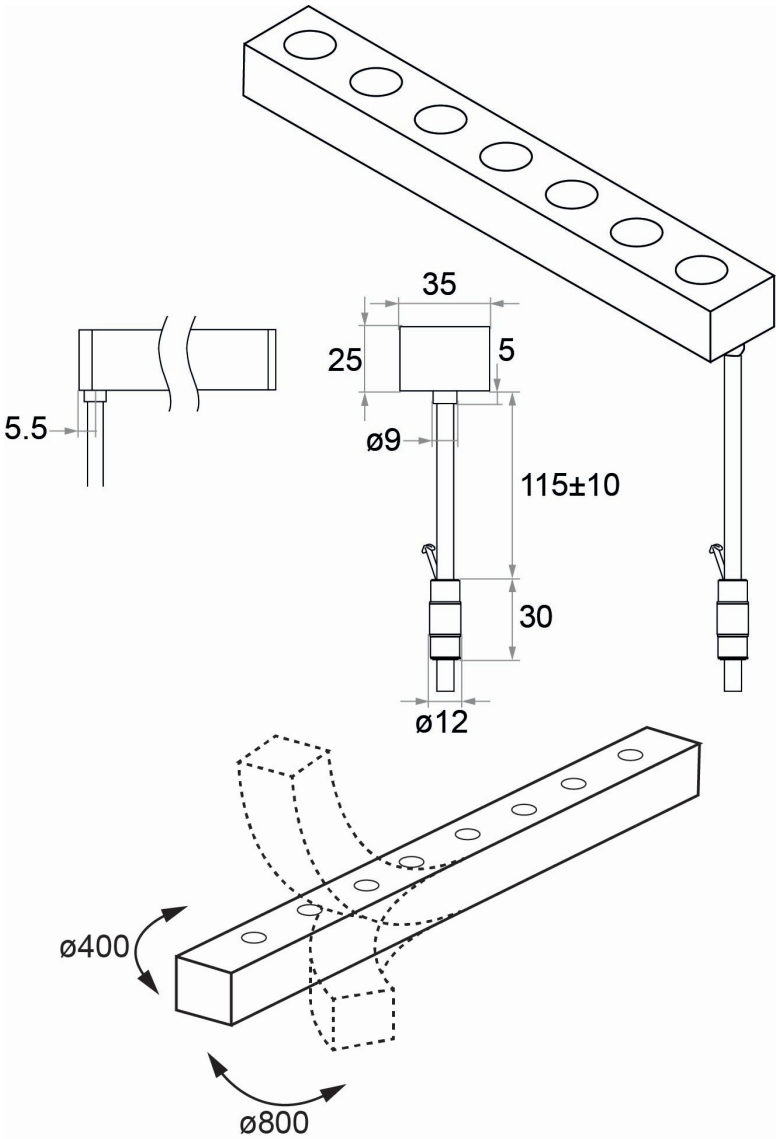
TECHNICAL DRAWING