rutec LIGHTDESIGN GmbH | Carl-Zeiss-Str. 13 | 28857 Syke
TEL +49 4242 / 84034 - 0 | E-MAIL INFO@RUTECLIGHTDESIGN.DE | WWW.RUTECLIGHTDESIGN.DE

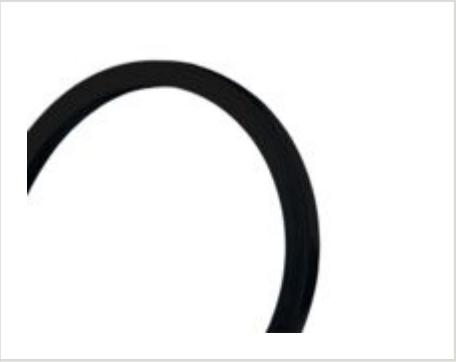

VARDAflex Neon TVQ BLACK - 3000K LD S?-?? Flex.LEDStrip, 24V, WW

Article nr.: S86505

Flexible LED Stripe sealed in UV-, chlorine-, · salt water-, solventresistant white PVC · for indoor- and outdoor use, IP67/68 · · cuttable every 55.56 mm / 7 LEDs · amount of LEDs per meter: 126 · LED pitch: 7.94 mm · beam angle: 120° · CRI: >80 · luminous flux per meter: 98 lm · voltage: 24V DC · power per Meter: 12 W · lifespan L70B50: >= 36,000 h · WxH in mm: 16 x 17 · · temperature range: -20 to +45°C · installation temperature: +10 to +45°C · maximum length per connection: 10 meter · bending radius vertical: 150 mm · this product contains a light source of energy efficiency class E.

TECHNICAL DATA

Unit Code	metre
BAR code	4012094865058
Housing colour	Schwarz
Width	16.00 mm
Height	17.00 mm
LED colour	ca. 3000K warmweiß
Lightoutput per LED	0.77 lm
Lamp	including LED
IP rating	68
Psb	0,00 W

rutec LIGHTDESIGN GmbH | Carl-Zeiss-Str. 13 | 28857 Syke
TEL +49 4242 / 84034 - 0 | E-MAIL INFO@RUTECLIGHTDESIGN.DE | WWW.RUTECLIGHTDESIGN.DE

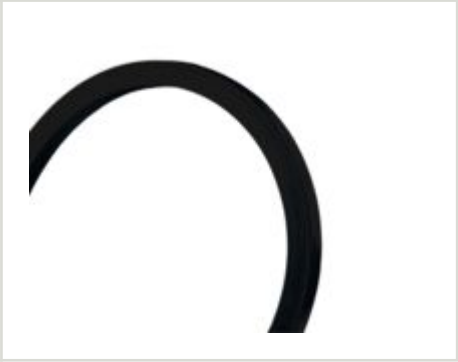

VARDAflex Neon TVQ BLACK - 3000K LD S?-?? Flex.LEDStrip, 24V, WW

Article nr.: S86505

TECHNICAL DATA

Voltage	24 V
Material	Kunststoff
Temperature range	-20 - 45
LED per meter	126
Dimension of segments	55.56 mm
CRI	≥ 80
Lifetime L70B50	36.000 h
Suitable light source	

rutec LIGHTDESIGN GmbH | Carl-Zeiss-Str. 13 | 28857 Syke
TEL +49 4242 / 84034 - 0 | E-MAIL INFO@RUTECLIGHTDESIGN.DE | WWW.RUTECLIGHTDESIGN.DE

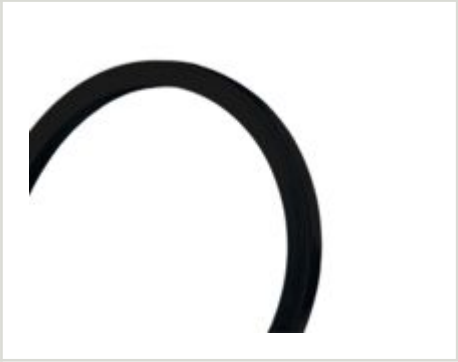

VARDAflex Neon TVQ BLACK - 3000K LD S?-?? Flex.LEDStrip, 24V, WW

Article nr.: S86505
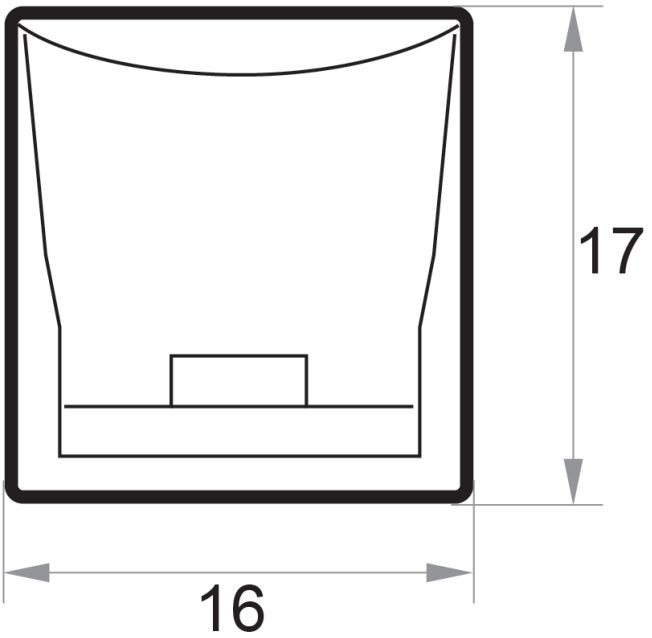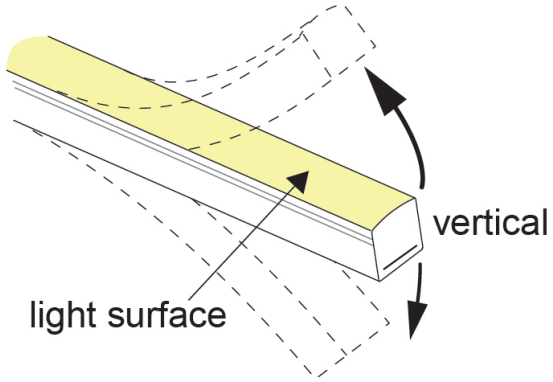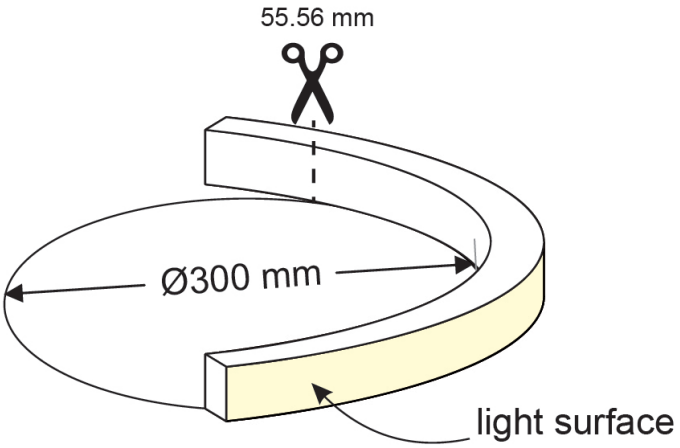
TECHNICAL DRAWING