rutec LIGHTDESIGN GmbH | Carl-Zeiss-Str. 13 | 28857 Syke

TEL +49 4242 / 84034 - 0 | E-MAIL INFO@RUTECLIGHTDESIGN.DE | WWW.RUTECLIGHTDESIGN.DE

VARDAflex Platin Hyper TVQ - 3000K LD S?-?? Flex.LEDStrip, 24V, WW

Article nr.: S76705

Flexible LED Stripe sealed in UV-, chlorine-, · salt water-, solvent- and heat-resistant special silicone · for indoor and outdoor use, IP68 · · cuttable every 55.56 mm / 8 LEDs · number of LEDs per meter: 144 · LED pitch: 6.94 mm · beam angle: 120° · CRI: >80 · luminous flux per meter: 1910 lm · voltage: 24 V DC · power per meter: 18 W · lifespan L70B50: >= 36,000 h · WxH in mm: 16 x 17 · Temperature range: -40 to +45°C · Processing temperature: +10 to +45°C · Maximum length per connection: 5 meter · Bending radius vertically: 150 mm · anti-wicking ferrule diameter = 12 mm: the anti-wicking ferrule is located at · 115 mm from the connector on the cable. · This product contains a lightsource of energy efficiency class C

TECHNICAL DATA

Unit Code	metre
BAR code	4012094767055
Housing colour	Weiss
Width	16.00 mm
Height	17.00 mm
LED colour	ca. 3000K warmweiß
Lightoutput per LED	13.26 lm
Lamp	including LED
IP rating	68
Voltage	24 V

rutec LIGHTDESIGN GmbH | Carl-Zeiss-Str. 13 | 28857 Syke

TEL +49 4242 / 84034 - 0 | E-MAIL INFO@RUTECLIGHTDESIGN.DE | WWW.RUTECLIGHTDESIGN.DE

VARDAflex Platin Hyper TVQ - 3000K LD S?-?? Flex.LEDStrip, 24V, WW

Article nr.: S76705

TECHNICAL DATA

Material	Kunststoff
Temperature range	-40 - 45
LED per meter	144
Dimension of segments	55.56 mm
CRI	≥ 80
Lifetime L70B50	36.000 h
Suitable light source	

rutec LIGHTDESIGN GmbH | Carl-Zeiss-Str. 13 | 28857 Syke

TEL +49 4242 / 84034 - 0 | E-MAIL INFO@RUTECLIGHTDESIGN.DE | WWW.RUTECLIGHTDESIGN.DE

VARDAflex Platin Hyper TVQ - 3000K LD S?-?? Flex.LEDStrip, 24V, WW

Article nr.: S76705
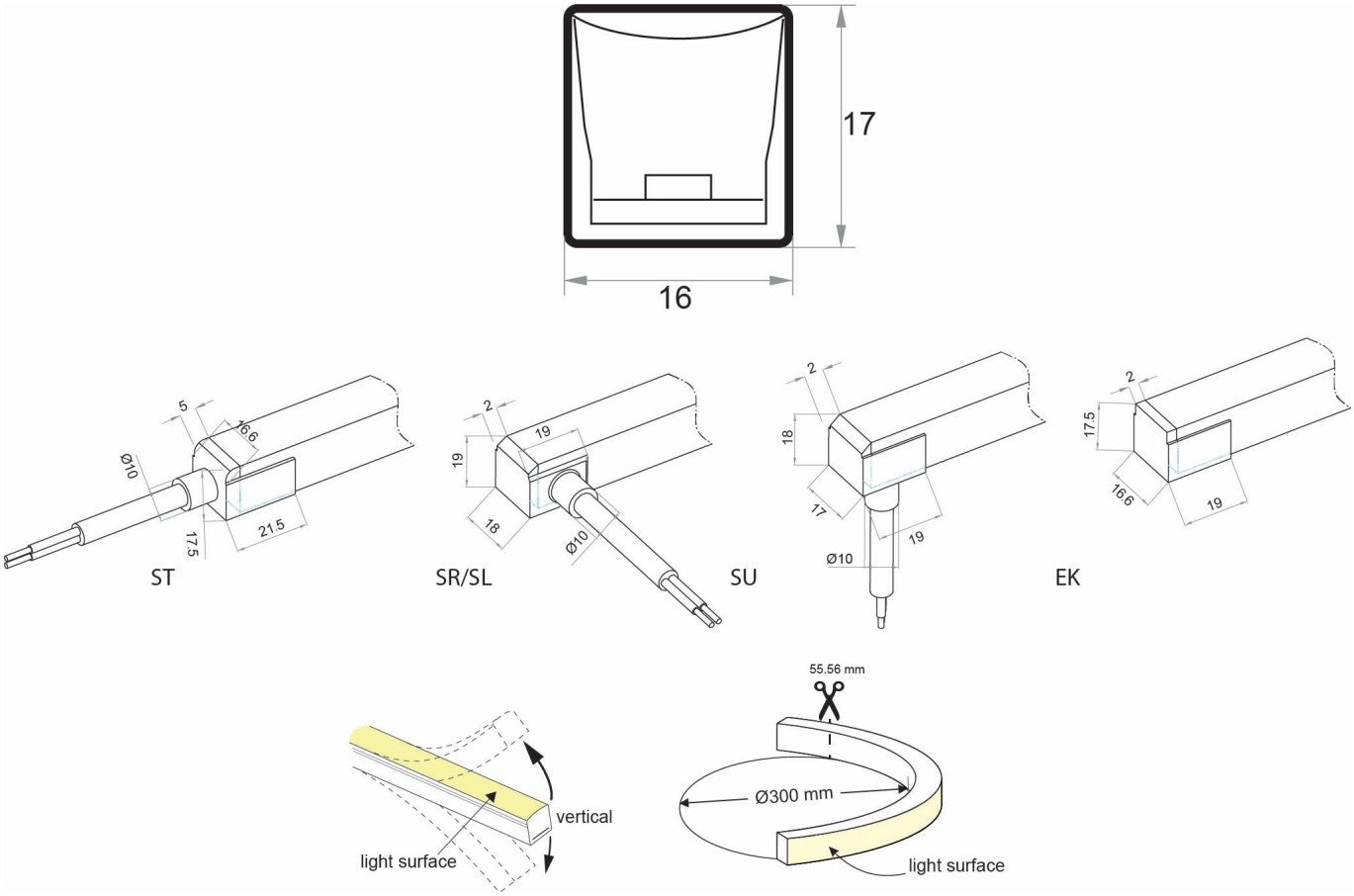
TECHNICAL DRAWING