rutec LIGHTDESIGN GmbH | Carl-Zeiss-Str. 13 | 28857 Syke
TEL +49 4242 / 84034 - 0 | E-MAIL INFO@RUTECLIGHTDESIGN.DE | WWW.RUTECLIGHTDESIGN.DE

CYRA+ XS Refit LED-Downlight, DALI, Refl., gl. starr, rd, 230V, 7/9/14/18/24W, IP20, 3000K, CRI90, RAL9016, 60°

Article nr.: C+XS-1-1-WW-90-60-12

Downlight for indoor use, IP20 · Front ring of galvanised sheet steel, powder-coated · COB module carrier and lens interchangeable · Trumpet reflector of ultra-pure aluminium, powder-coated matt white · Housing colour: RAL9016 · High-quality PMMA optic for precise light control and very good glare control · Homogeneous symmetrical illumination, UGR<19 · Beam angle: 60° · Power: 7, 9, 14, 18 or 24 W · Light colour: 3000 K · Luminous flux: 880, 1100, 1750, 2150 or 2950 lm · CRI: >90 · Lifespan L70B50: >= 60,000 h · Lifespan L80B10: >= 50,000 h · Input voltage: 220-240 V AC, 50/60 Hz · Protection class II · Installation depth: 85 mm · Ceiling cut-out: 145-165 mm · Outer diameter: 175 mm · Tool-free installation in the ceiling with tension springs that adapt to the ceiling thickness · (1 - 30 mm) · Installation in concrete pots possible · Control gear with luminaire cable pre-assembled for easy installation · Suitable for through-wiring · Dimmable via DALI-2 or Push-Dim · Can be used in central battery emergency lighting systems in accordance with EN61347-2-13 Annex J · This product contains a light source of energy efficiency class D

TECHNICAL DATA

Unit Code	pcs
BAR code	4012094284460
Housing colour	weiß RAL9016
Height	85.00 mm
Outer diameter	175 mm
Hole size	165 mm
Depth in ceiling	85.00 mm
LED colour	ca. 3000K warmweiß
Lightoutput per fixture	2950.00 lm
Lamp	including LED

rutec LIGHTDESIGN GmbH | Carl-Zeiss-Str. 13 | 28857 Syke

TEL +49 4242 / 84034 - 0 | E-MAIL INFO@RUTECLIGHTDESIGN.DE | WWW.RUTECLIGHTDESIGN.DE

CYRA+ XS Refit LED-Downlight, DALI, Refl., gl. starr, rd, 230V, 7/9/14/18/24W, IP20, 3000K, CRI90, RAL9016, 60°

Article nr.: C+XS-1-1-WW-90-60-12

TECHNICAL DATA

IP rating	20
Power	7-24 W
Psb	0,00 W
Current mA	200-700 mA
Voltage	220-240 V
Lamp base	ohne
Amount of LED	1
Material	Aluminium
Temperature range	-20 - 50
CRI	≥ 90
Lifetime L70B50	60.000 h
Lifetime L90B10	42.000 h
Suitable light source	

rutec LIGHTDESIGN GmbH | Carl-Zeiss-Str. 13 | 28857 Syke

TEL +49 4242 / 84034 - 0 | E-MAIL INFO@RUTECLIGHTDESIGN.DE | WWW.RUTECLIGHTDESIGN.DE

CYRA+ XS Refit LED-Downlight, DALI, Refl., gl. starr, rd, 230V, 7/9/14/18/24W, IP20, 3000K, CRI90, RAL9016, 60°

Article nr.: C+XS-1-1-WW-90-60-12
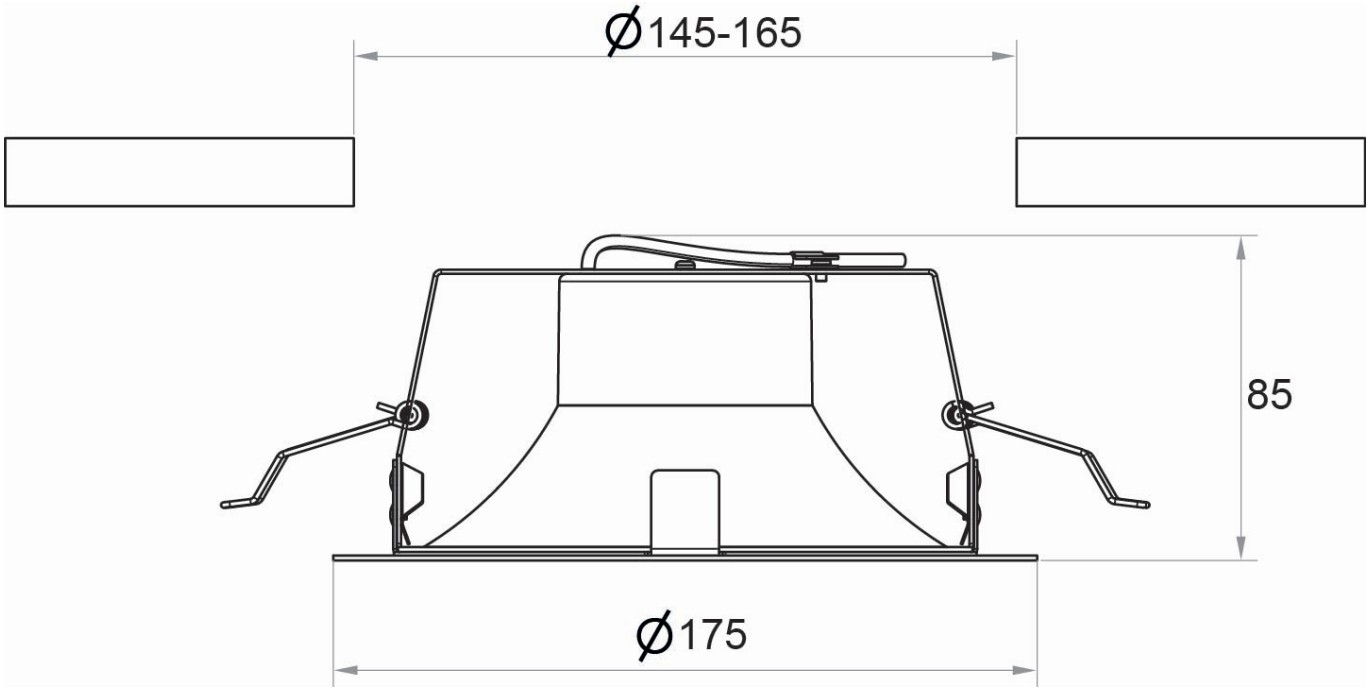
TECHNICAL DRAWING