rutec Licht GmbH & Co. KG | Carl-Zeiss-Str. 15 | 28857 Syke
TEL +49 (0) 42 42 95 65 - 0 | FAX +49 (0) 42 42 95 65 - 25 | E-MAIL INFO@RUTEC.DE | WWW.RUTEC.DE

VARDAflex Quantum Plus Profi - 5 M-Rolle Flex.LEDStrip, 24V, Innen, 2700K CRI80

Article nr.: 84107

flexible LED Strip with self adhesive backside, · for indoor use. · · can be seperated every 62.5 mm or 8 LEDs · number of LEDs: 640 · LED pitch: 7.81 mm · beam angle: 120° · CRI: >80 · lumen per meter: 1,880 lm · voltage: 24V DC · power per meter: 14 W · lifetime L70B50: >100,000 h · lifetime L80: >60,000 h · energy efficiency class: E · LxWxH in mm: 5,000 x 10 x 1.4 · · Easy installation with solderless connector (optional). · Maximum length per connection: 5 meter. New connectors for greater length. · Delivery contents: 5 meter roll · Eligible for funding under the BEG funding programme 2021 - 2030

TECHNICAL DATA

Unit Code	pcs
BAR code	4012094841076
Housing colour	Weiss
Length	5000.00 mm
Width	10.00 mm
Height	1.40 mm
LED colour	ca. 2700 K ultra warmweiß
Lightoutput per fixture	9400.00 lm
Lightoutput per LED	14.69 lm
Lamp	Inklusive LED

rutec Licht GmbH & Co. KG | Carl-Zeiss-Str. 15 | 28857 Syke
TEL +49 (0) 42 42 95 65 - 0 | FAX +49 (0) 42 42 95 65 - 25 | E-MAIL INFO@RUTEC.DE | WWW.RUTEC.DE

VARDAflex Quantum Plus Profi - 5 M-Rolle Flex.LEDStrip, 24V, Innen, 2700K CRI80

Article nr.: 84107

TECHNICAL DATA

IP rating	20
Power	70 W
Psb	0,00 W
Current mA	2.917 mA
Voltage	24 V
Amount of LED	640
Temperature range	-20 - 45
LED per meter	128
Dimension of segments	62.50 mm
Energy ffficiency class	EEK-Label_E
CRI	≥ 80
Lifetime L70B50	100.000 h

rutec Licht GmbH & Co. KG | Carl-Zeiss-Str. 15 | 28857 Syke
TEL +49 (0) 42 42 95 65 - 0 | FAX +49 (0) 42 42 95 65 - 25 | E-MAIL INFO@RUTEC.DE | WWW.RUTEC.DE

VARDAflex Quantum Plus Profi - 5 M-Rolle Flex.LEDStrip, 24V, Innen, 2700K CRI80

Article nr.: 84107
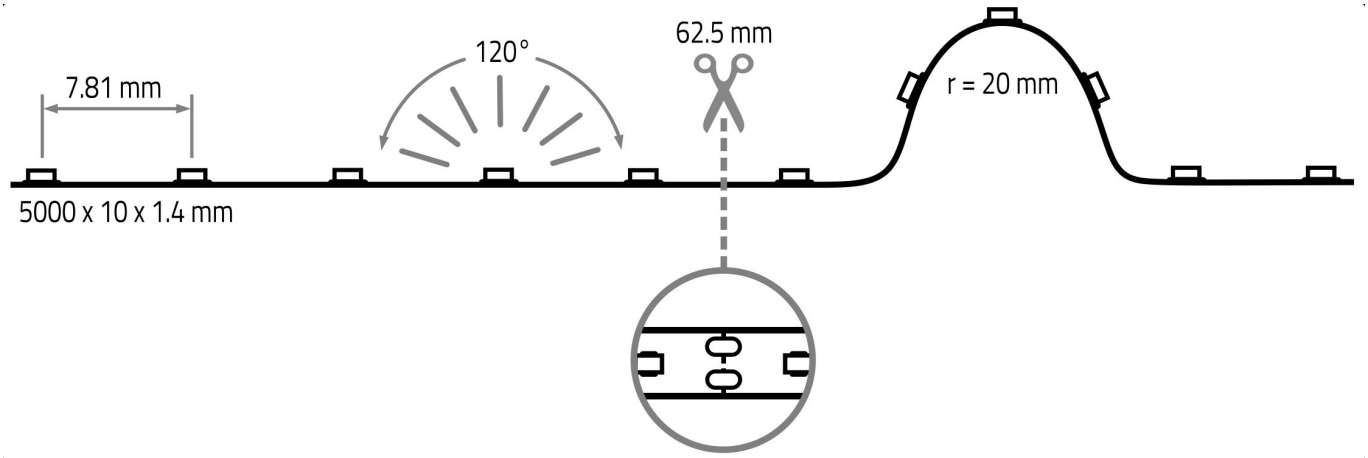
TECHNICAL DRAWING