rutec Licht GmbH & Co. KG | Carl-Zeiss-Str. 15 | 28857 Syke

TEL +49 (0) 42 42 95 65 - 0 | FAX +49 (0) 42 42 95 65 - 25 | E-MAIL INFO@RUTEC.DE | WWW.RUTEC.DE

VARDAflex Pro 5 M- R. Flex.LEDStrip, 24V, Innen, 3000K CRI95

Article nr.: 71313

flexible LED Strip with self adhesive backside, · for indoor use. · · Can be seperated every 33 mm or 7 LEDs · Number of LEDs: 1050 · LED pitch: 4,76 mm · beam angle: 120° · CRI: >95 · Lumen per meter: 600 lm · Voltage: 24V DC · Power per meter: 6 W · Lifetime L70B50: >= 50,000 h · energy efficiency class: F · LxWxH in mm: 5,000 x 10 x 1.1 · · Maximum length per connection: 8 meter. New connectors for greater length. · Delivery contents: 5 meter roll

TECHNICAL DATA

Unit Code	pcs
BAR code	4012094713137
Housing colour	Weiss
Length	5000.00 mm
Width	10.00 mm
Height	1.10 mm
LED colour	ca. 3000K warmweiß
Lightoutput per fixture	3000.00 lm
Lightoutput per LED	2.86 lm
Lamp	Inklusive LED

rutec Licht GmbH & Co. KG | Carl-Zeiss-Str. 15 | 28857 Syke

TEL +49 (0) 42 42 95 65 - 0 | FAX +49 (0) 42 42 95 65 - 25 | E-MAIL INFO@RUTEC.DE | WWW.RUTEC.DE

VARDAflex Pro 5 M- R. Flex.LEDStrip, 24V, Innen, 3000K CRI95

Article nr.: 71313

TECHNICAL DATA

IP rating	20
Power	30 W
Current mA	1.250 mA
Voltage	24 V
Amount of LED	1050
Temperature range	-20 - 45
LED per meter	210
Dimension of segments	33.00 mm
Energy ffficiency class	EEK-Label_F
CRI	≥ 95
Lifetime L70B50	50.000 h

rutec Licht GmbH & Co. KG | Carl-Zeiss-Str. 15 | 28857 Syke

TEL +49 (0) 42 42 95 65 - 0 | FAX +49 (0) 42 42 95 65 - 25 | E-MAIL INFO@RUTEC.DE | WWW.RUTEC.DE

VARDAflex Pro 5 M- R. Flex.LEDStrip, 24V, Innen, 3000K CRI95

Article nr.: 71313
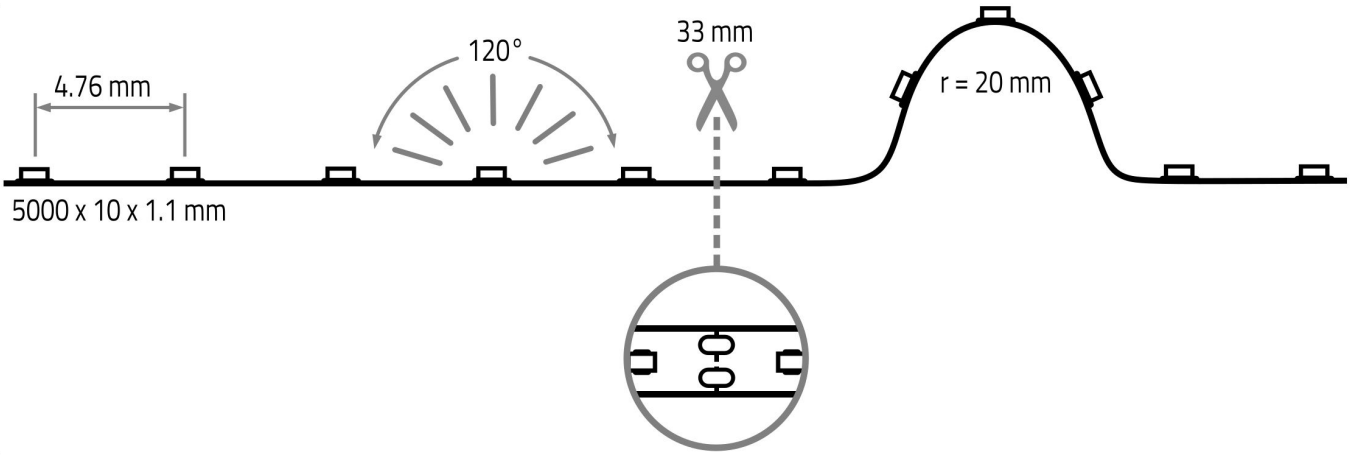
TECHNICAL DRAWING