**rutec Licht GmbH & Co. KG** | Carl-Zeiss-Str. 15 | 28857 Syke

TEL +49 (0) 42 42 95 65 - 0 | FAX +49 (0) 42 42 95 65 - 25 | E-MAIL INFO@RUTEC.DE | WWW.RUTEC.DE

# für VARDAflex LED-Strips Einspeisungsverb. Push Einf. 8mm IP67

Article nr.: 70595

LxWxH in mm: 24.3 x 12.6 x 7.7 · for wire cross-section: 0.34 - 0.75 sq mm · max. current carrying capacity: 5 A (12V/60W, 24V/120W)

## TECHNICAL DATA

| | |
|---|---|
| Unit Code | pcs |
| BAR code | 4012094705958 |
| Housing colour | farblos |
| Length | 24.30 mm |
| Width | 12.60 mm |
| Height | 7.70 mm |
| Lamp | without |
| Current mA | 5000 mA |
| Voltage | 3-24 V |
| Material | Kunststoff |

**rutec Licht GmbH & Co. KG** | Carl-Zeiss-Str. 15 | 28857 Syke

TEL +49 (0) 42 42 95 65 - 0 | FAX +49 (0) 42 42 95 65 - 25 | E-MAIL INFO@RUTEC.DE | WWW.RUTEC.DE

# für VARDAflex LED-Strips Einspeisungsverb. Push Einf. 8mm IP67

Article nr.: 70595

## TECHNICAL DATA

Suitable light source

**rutec Licht GmbH & Co. KG** | Carl-Zeiss-Str. 15 | 28857 Syke

TEL +49 (0) 42 42 95 65 - 0 | FAX +49 (0) 42 42 95 65 - 25 | E-MAIL INFO@RUTEC.DE | WWW.RUTEC.DE

# für VARDAflex LED-Strips Einspeisungsverb. Push Einf. 8mm IP67

Article nr.: 70595
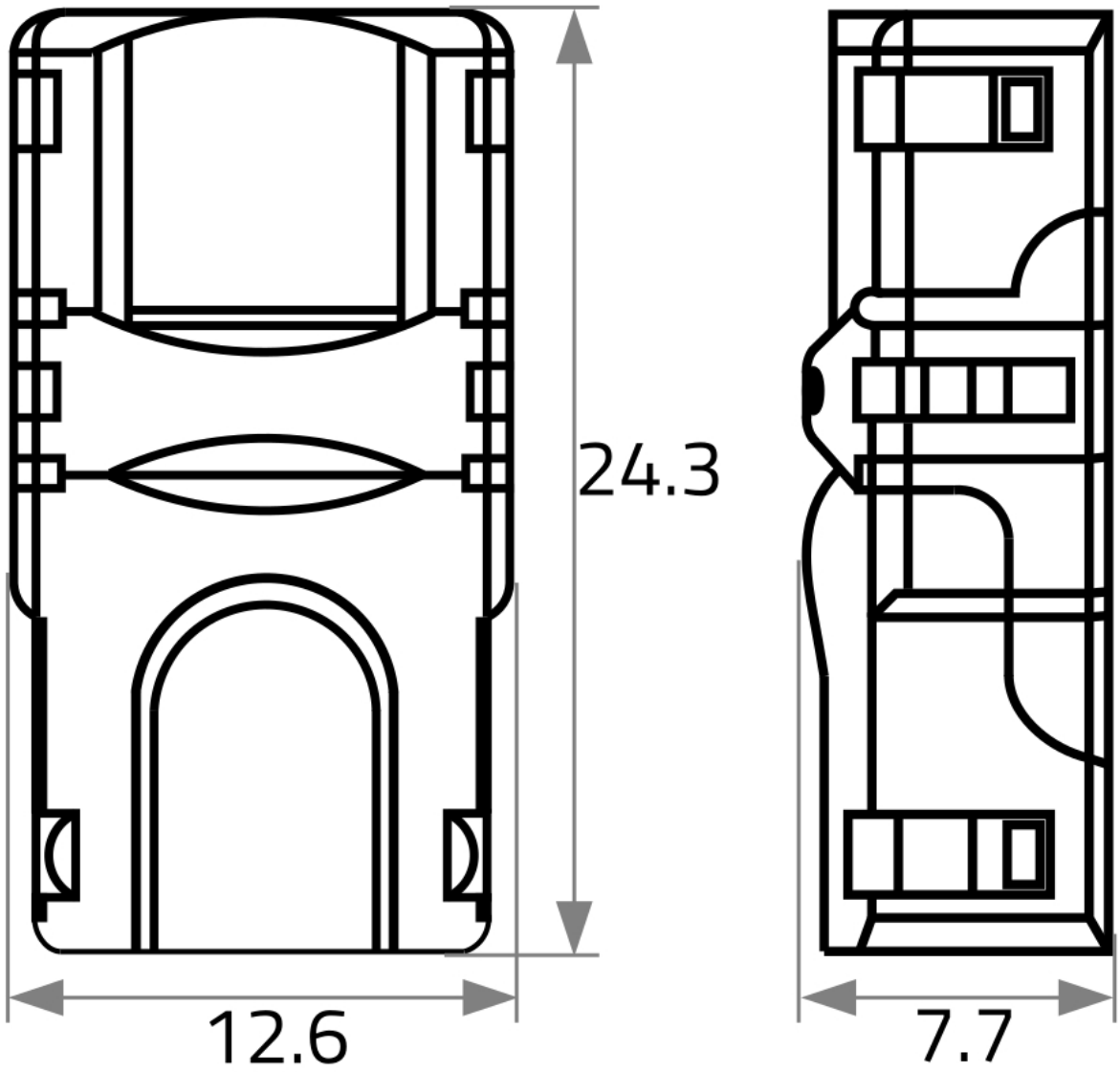
## TECHNICAL DRAWING