rutec Licht GmbH & Co. KG | Carl-Zeiss-Str. 15 | 28857 Syke

TEL +49 (0) 42 42 95 65 - 0 | FAX +49 (0) 42 42 95 65 - 25 | E-MAIL INFO@RUTEC.DE | WWW.RUTEC.DE

Secondlife-Shop

Scheibe matt 3000K - Serie SILMA LED-EBS RUND WEISS 25W IP44 600mA

Article nr.: 48325

for indoor use, IP44 · · housing: diecast aluminum (plastic protection cover, diffuse) · housing colour: white · not swivelling · beam angle: 90° · power: 25 W · light colour: 3000 K (100K) warm white · kuminous flux: 2654 lm · CRI: >80 · lifespan L70: >= 50.000 h · input: 600 mA DC · protection class III · · installation depth: 70 mm · ceiling cut-out: 200 mm · outer diameter: 220 mm · energy efficiency class: E · not including constant current converter (can only be operated with switchable converters) · · SECONDLIFE ITEM -heavily discounted- only while stocks last!

TECHNICAL DATA

Unit Code	pcs
BAR code	4012094483252
Housing colour	Weiss
Height	60.00 mm
Outer diameter	220 mm
Hole size	200 mm
Depth in ceiling	70.00 mm
LED colour	ca. 3000K warmweiß
Lightoutput per fixture	2654.00 lm
Lamp	including LED

rutec Licht GmbH & Co. KG | Carl-Zeiss-Str. 15 | 28857 Syke

TEL +49 (0) 42 42 95 65 - 0 | FAX +49 (0) 42 42 95 65 - 25 | E-MAIL INFO@RUTEC.DE | WWW.RUTEC.DE

Secondlife-Shop

Scheibe matt 3000K - Serie SILMA LED-EBS RUND WEISS 25W IP44 600mA

Article nr.: 48325

TECHNICAL DATA

IP rating	44
Power	25 W
Current mA	600 mA
Lamp base	ohne
Material	Aluminium
Temperature range	-20 - 50
Energy ffficiency class	EEK-Label_E
CRI	≥ 80
Suitable light source	

rutec Licht GmbH & Co. KG | Carl-Zeiss-Str. 15 | 28857 Syke

TEL +49 (0) 42 42 95 65 - 0 | FAX +49 (0) 42 42 95 65 - 25 | E-MAIL INFO@RUTEC.DE | WWW.RUTEC.DE

Secondlife-Shop

Scheibe matt 3000K - Serie SILMA LED-EBS RUND WEISS 25W IP44 600mA

Article nr.: 48325
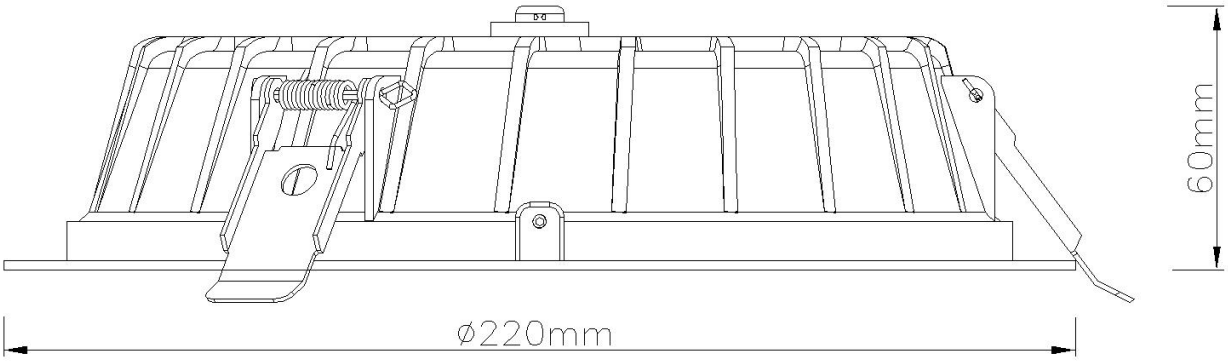
TECHNICAL DRAWING