rutec Licht GmbH & Co. KG | Carl-Zeiss-Str. 15 | 28857 Syke

TEL +49 (0) 42 42 95 65 - 0 | FAX +49 (0) 42 42 95 65 - 25 | E-MAIL INFO@RUTEC.DE | WWW.RUTEC.DE

Scheibe matt 3000K - Serie SILMA LED-EBS RUND WEISS 20W IP44 500mA

Article nr.: 48320

· housing: diecast aluminum (plastic protection cover, diffuse) · housing colour: white · not swivelling · beam angle: 90° · power: 20 W · light colour: 3000 K (100K) warm white · luminous flux: 2014 lm · CRI: >80 · lifespan L70: >= 50.000 h · input: 500 mA DC · protection class III · · installation depth: 70 mm · ceiling cut-out: 180 mm · outer diameter: 205 mm · energy efficiency class: F · not including constant current converter (can only be operated with switchable converters) · · SECONDLIFE ITEM - heavily discounted- only while stocks last!

TECHNICAL DATA

Unit Code	pcs
BAR code	4012094483207
Housing colour	Weiss
Height	60.00 mm
Outer diameter	205 mm
Hole size	180 mm
Depth in ceiling	70.00 mm
LED colour	ca. 3000K warmweiß
Lightoutput per fixture	2014.00 lm
Lamp	including LED

rutec Licht GmbH & Co. KG | Carl-Zeiss-Str. 15 | 28857 Syke

TEL +49 (0) 42 42 95 65 - 0 | FAX +49 (0) 42 42 95 65 - 25 | E-MAIL INFO@RUTEC.DE | WWW.RUTEC.DE

Scheibe matt 3000K - Serie SILMA LED-EBS RUND WEISS 20W IP44 500mA

Article nr.: 48320

TECHNICAL DATA

IP rating	44
Power	20 W
Current mA	500 mA
Lamp base	ohne
Material	Aluminium
Temperature range	-20 - 50
Energy ffficiency class	EEK-Label_F
CRI	≥ 80
Suitable light source	

rutec Licht GmbH & Co. KG | Carl-Zeiss-Str. 15 | 28857 Syke

TEL +49 (0) 42 42 95 65 - 0 | FAX +49 (0) 42 42 95 65 - 25 | E-MAIL INFO@RUTEC.DE | WWW.RUTEC.DE

Scheibe matt 3000K - Serie SILMA LED-EBS RUND WEISS 20W IP44 500mA

Article nr.: 48320
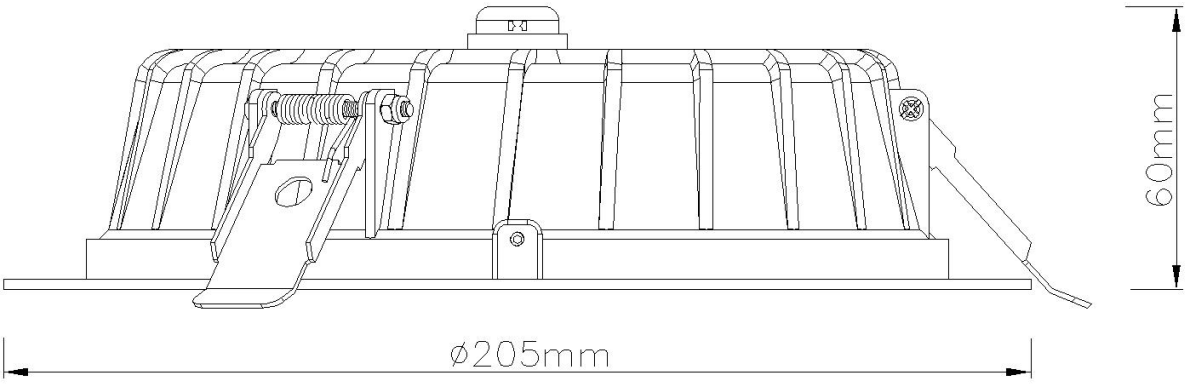
TECHNICAL DRAWING