**rutec Licht GmbH & Co. KG** | Carl-Zeiss-Str. 15 | 28857 Syke

TEL +49 (0) 42 42 95 65 - 0 | FAX +49 (0) 42 42 95 65 - 25 | E-MAIL INFO@RUTEC.DE | WWW.RUTEC.DE

# Aluminium gebürstet ohne Konverter MELIMAR - Kard.Strahler, 1fach-LED Rund

Article nr.: LED57530WWOK

SECONDLIFE ITEM -heavily discounted- only while stocks last!

## TECHNICAL DATA

| | |
|---|---|
| Unit Code | pcs |
| BAR code | 4012094575308 |
| Housing colour | Aluminium |
| Height | 37.00 mm |
| Outer diameter | 70 mm |
| Hole size | 60 mm |
| Depth in ceiling | 45.00 mm |
| LED colour | ca. 3000K warmweiß |
| Lightoutput per fixture | 210.00 lm |
| Lamp | including LED |

**rutec Licht GmbH & Co. KG** | Carl-Zeiss-Str. 15 | 28857 Syke

TEL +49 (0) 42 42 95 65 - 0 | FAX +49 (0) 42 42 95 65 - 25 | E-MAIL INFO@RUTEC.DE | WWW.RUTEC.DE

# Aluminium gebürstet ohne Konverter MELIMAR - Kard.Strahler, 1fach-LED Rund

Article nr.: LED57530WWOK

## TECHNICAL DATA

| | |
|---|---|
| IP rating | 20 |
| Power | 3,7 W |
| Current mA | 350 mA |
| Lamp base | ohne |
| Amount of LED | 1 |
| Output voltage | 10-11 |
| Material | Aluminium |
| Temperature range | -40 - 70 |
| Energy ffficiency class | EEK-Label_G |
| CRI | ≥ 80 |
| Lifetime L70B50 | 50.000 h |
| Suitable light source | |

**rutec Licht GmbH & Co. KG** | Carl-Zeiss-Str. 15 | 28857 Syke

TEL +49 (0) 42 42 95 65 - 0 | FAX +49 (0) 42 42 95 65 - 25 | E-MAIL INFO@RUTEC.DE | WWW.RUTEC.DE

# Aluminium gebürstet ohne Konverter MELIMAR - Kard.Strahler, 1fach-LED Rund

Article nr.: LED57530WWOK
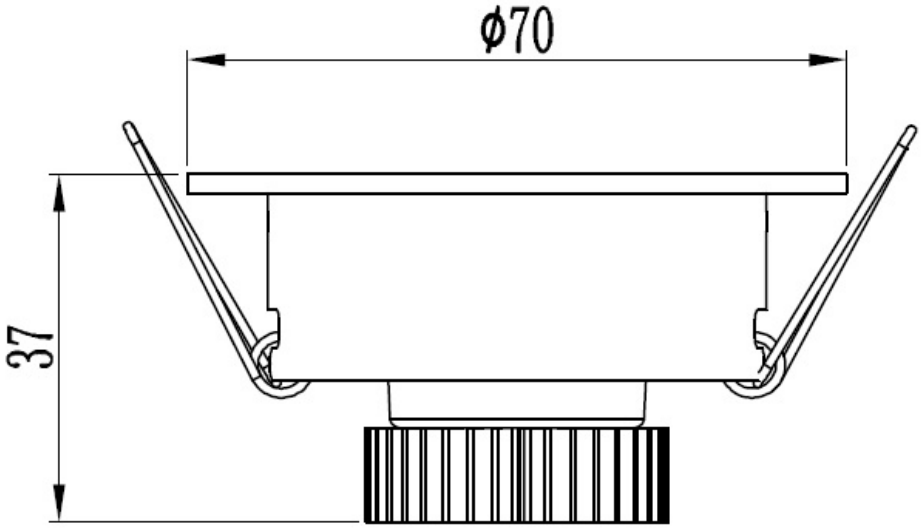
## TECHNICAL DRAWING