rutec Licht GmbH & Co. KG | Carl-Zeiss-Str. 15 | 28857 Syke

TEL +49 (0) 42 42 95 65 - 0 | FAX +49 (0) 42 42 95 65 - 25 | E-MAIL INFO@RUTEC.DE | WWW.RUTEC.DE

starr 1, 4401 X5CrNiMo 316 weiß LED Einbaustr. 8W IP55 Eckig o.Konverter

Article nr.: R57661UWWOK

for indoor- and outdoor use, IP 55 · · housing: V4A stainless steel, glass reflector, protective glass · housing color: white · not swivelling · beam angle: 25° · power: 8 W · light color: 2700 K · luminous flux: 738 lm · CRI: >80 · lifetime L70B50: >= 54.000 h · input: 350 mA DC · protection class III · · installation depth: 55 mm · ceiling cut-out: 68 mm · outer dimensions: 82 x 82 mm · energie efficiency class: F · not included LED converter · SECONDLIFE ITEM -heavily discounted- only while stocks last!

TECHNICAL DATA

Unit Code	pcs
BAR code	4012094476612
Housing colour	Weiss
Length	82.00 mm
Width	82.00 mm
Height	44.00 mm
Hole size	68 mm
Depth in ceiling	55.00 mm
LED colour	ca. 2700K ultra warmweiß
Lightoutput per fixture	738.00 lm

rutec Licht GmbH & Co. KG | Carl-Zeiss-Str. 15 | 28857 Syke

TEL +49 (0) 42 42 95 65 - 0 | FAX +49 (0) 42 42 95 65 - 25 | E-MAIL INFO@RUTEC.DE | WWW.RUTEC.DE

starr 1, 4401 X5CrNiMo 316 weiß LED Einbaustr. 8W IP55 Eckig o.Konverter

Article nr.: R57661UWWOK

TECHNICAL DATA

Lamp	including LED
IP rating	55
Power	8 W
Current mA	350 mA
Lamp base	ohne
Amount of LED	1
Material	Edelstahl
Temperature range	-20 - 40
Energy ffficiency class	EEK-Label_F
CRI	≥ 80
Lifetime L70B50	54.000 h
Suitable light source	

rutec Licht GmbH & Co. KG | Carl-Zeiss-Str. 15 | 28857 Syke

TEL +49 (0) 42 42 95 65 - 0 | FAX +49 (0) 42 42 95 65 - 25 | E-MAIL INFO@RUTEC.DE | WWW.RUTEC.DE

starr 1, 4401 X5CrNiMo 316 weiß LED Einbaustr. 8W IP55 Eckig o.Konverter

Article nr.: R57661UWWOK
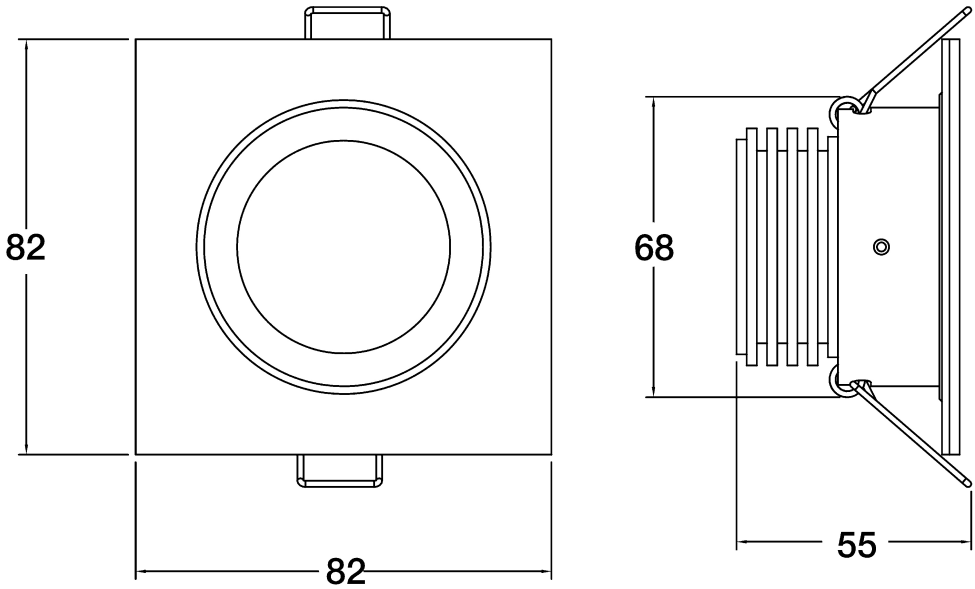
TECHNICAL DRAWING