rutec Licht GmbH & Co. KG | Carl-Zeiss-Str. 15 | 28857 Syke

TEL +49 (0) 42 42 95 65 - 0 | FAX +49 (0) 42 42 95 65 - 25 | E-MAIL INFO@RUTEC.DE | WWW.RUTEC.DE

Scheibe matt 3000K - Serie SILMA LED-EBS RUND WEISS 10W IP44 300mA

Article nr.: 48310

for indoor use, IP44 · · housing: diecast aluminum (plastic protection cover, diffuse) · housing colour: white · not swivelling · beam angle: 90° · power: 10 W · light colour: 3000 K (100K) warm white · luminous flux: 999 lm · CRI: >80 · lifespan L70: >= 50.000 h · input: 300 mA DC · protection class III · · installation depth: 70 mm · ceiling cut-out: 135 mm · outer diameter: 160 mm · energie efficiency class: F · not including constant current converter (can only be operated with switchable converters) · · SECONDLIFE ITEM -heavily discounted- only while stocks last!

TECHNICAL DATA

Unit Code	pcs
BAR code	4012094483108
Housing colour	Weiss
Height	60.00 mm
Outer diameter	160 mm
Hole size	135 mm
Depth in ceiling	70.00 mm
LED colour	ca. 3000K warmweiß
Lightoutput per fixture	999.00 lm
Lamp	including LED

rutec Licht GmbH & Co. KG | Carl-Zeiss-Str. 15 | 28857 Syke

TEL +49 (0) 42 42 95 65 - 0 | FAX +49 (0) 42 42 95 65 - 25 | E-MAIL INFO@RUTEC.DE | WWW.RUTEC.DE

Scheibe matt 3000K - Serie SILMA LED-EBS RUND WEISS 10W IP44 300mA

Article nr.: 48310

TECHNICAL DATA

IP rating	44
Power	10 W
Current mA	300 mA
Lamp base	ohne
Amount of LED	33
Material	Aluminium
Temperature range	-20 - 50
Energy ffficiency class	EEK-Label_F
CRI	≥ 80
Lifetime L70B50	50.000 h
Suitable light source	

rutec Licht GmbH & Co. KG | Carl-Zeiss-Str. 15 | 28857 Syke

TEL +49 (0) 42 42 95 65 - 0 | FAX +49 (0) 42 42 95 65 - 25 | E-MAIL INFO@RUTEC.DE | WWW.RUTEC.DE

Scheibe matt 3000K - Serie SILMA LED-EBS RUND WEISS 10W IP44 300mA

Article nr.: 48310
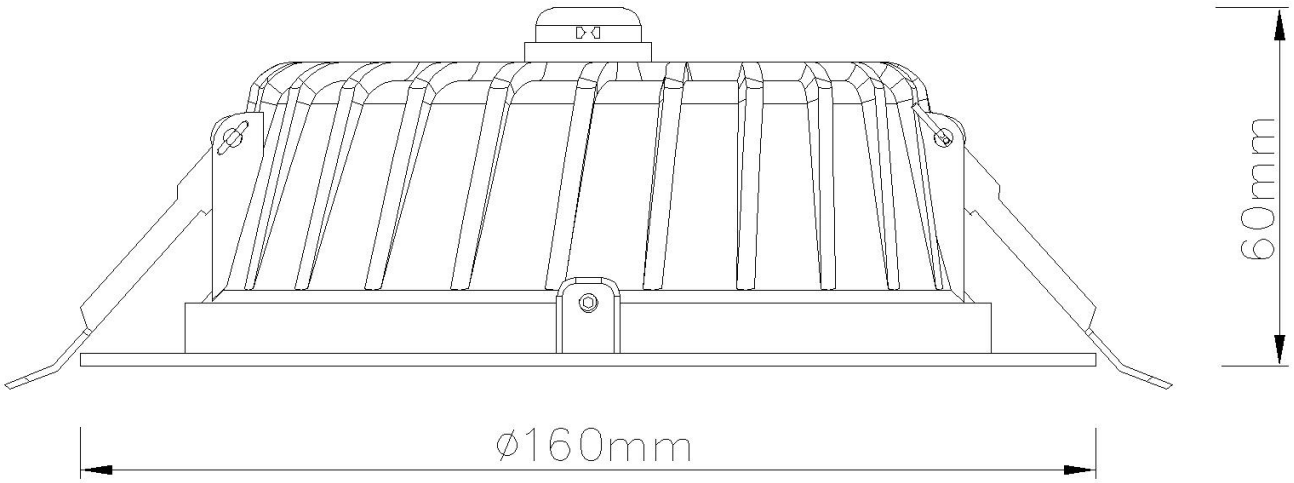
TECHNICAL DRAWING