**rutec Licht GmbH & Co. KG** | Carl-Zeiss-Str. 15 | 28857 Syke

TEL +49 (0) 42 42 95 65 - 0 | FAX +49 (0) 42 42 95 65 - 25 | E-MAIL INFO@RUTEC.DE | WWW.RUTEC.DE

# starr - chrom Einbaustrahler IP 44

Article nr.: R55884

Item No. R5588 · Fixed, IP44, for ø 50 mm Light Bulb · For Indoor Use, Usable in Moist Rooms · Material: 1 - Aluminum Die Casting, Housing - Sheet Steel (Black), Leaf Springs · Front Shade is Completely Removable for Light Bulb Replacement, Including Matte · Safety Glass, Glare Free · Protection IP44 for Installation in Ceilings · Excluding: Light Bulb · without low-voltage socket art.-no .: 55004 (SKIII) · without high-voltage version + strain relief item no .: 55003 (SKII)

## TECHNICAL DATA

| | |
|---|---|
| Unit Code | pcs |
| BAR code | 4012094558844 |
| Housing colour | Chrom |
| Height | 100.00 mm |
| Outer diameter | 85 mm |
| Hole size | 70 mm |
| Lamp | Ohne |
| IP rating | 44 |
| Power | 1-50 W |
| Lamp base | ohne |

**rutec Licht GmbH & Co. KG** | Carl-Zeiss-Str. 15 | 28857 Syke

TEL +49 (0) 42 42 95 65 - 0 | FAX +49 (0) 42 42 95 65 - 25 | E-MAIL INFO@RUTEC.DE | WWW.RUTEC.DE

# starr - chrom Einbaustrahler IP 44

Article nr.: R55884

## TECHNICAL DATA

| | |
|---|---|
| Amount of LED | 1 |
| Material | Aluminium |
| Temperature range | to 70 |

**rutec Licht GmbH & Co. KG** | Carl-Zeiss-Str. 15 | 28857 Syke
TEL +49 (0) 42 42 95 65 - 0 | FAX +49 (0) 42 42 95 65 - 25 | E-MAIL INFO@RUTEC.DE | WWW.RUTEC.DE

# starr - chrom Einbaustrahler IP 44

Article nr.: R55884
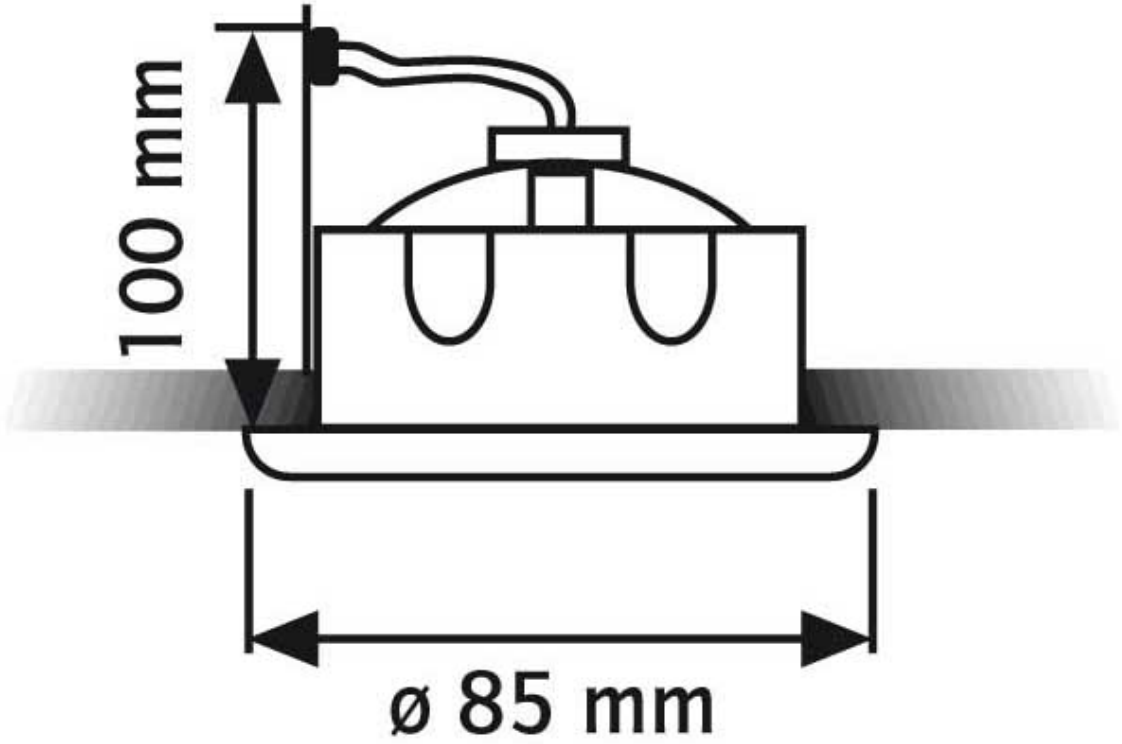
## TECHNICAL DRAWING