rutec Licht GmbH & Co. KG | Carl-Zeiss-Str. 15 | 28857 Syke

TEL +49 (0) 42 42 95 65 - 0 | FAX +49 (0) 42 42 95 65 - 25 | E-MAIL INFO@RUTEC.DE | WWW.RUTEC.DE

starr - weiß matt Einbaustrahler IP 44

Article nr.: R55881-M

Fixed, IP44, for 50 mm Light Bulb · For Indoor Use, Usable in Moist Rooms · Material: 1 - Aluminum Die Casting, Housing - Sheet Steel (Black), Leaf Springs · Front Shade is Completely Removable for Light Bulb Replacement, Including Matte · Safety Glass, Glare Free · Protection IP44 for Installation in Ceilings · Excluding: Light Bulb · without low-voltage socket art.-no .: 55004 (SKIII) · without high-voltage version + strain relief item no .: 55003 (SKII)

TECHNICAL DATA

Unit Code	pcs
BAR code	4012094268811
Housing colour	Weiss
Height	100.00 mm
Outer diameter	85 mm
Hole size	70 mm
Lamp	without
IP rating	44
Power	1-50 W
Lamp base	ohne

rutec Licht GmbH & Co. KG | Carl-Zeiss-Str. 15 | 28857 Syke

TEL +49 (0) 42 42 95 65 - 0 | FAX +49 (0) 42 42 95 65 - 25 | E-MAIL INFO@RUTEC.DE | WWW.RUTEC.DE

starr - weiß matt Einbaustrahler IP 44

Article nr.: R55881-M

TECHNICAL DATA

Amount of LED	1
Material	Aluminium
Temperature range	to 70
Suitable light source	

rutec Licht GmbH & Co. KG | Carl-Zeiss-Str. 15 | 28857 Syke

TEL +49 (0) 42 42 95 65 - 0 | FAX +49 (0) 42 42 95 65 - 25 | E-MAIL INFO@RUTEC.DE | WWW.RUTEC.DE

starr - weiß matt Einbaustrahler IP 44

Article nr.: R55881-M
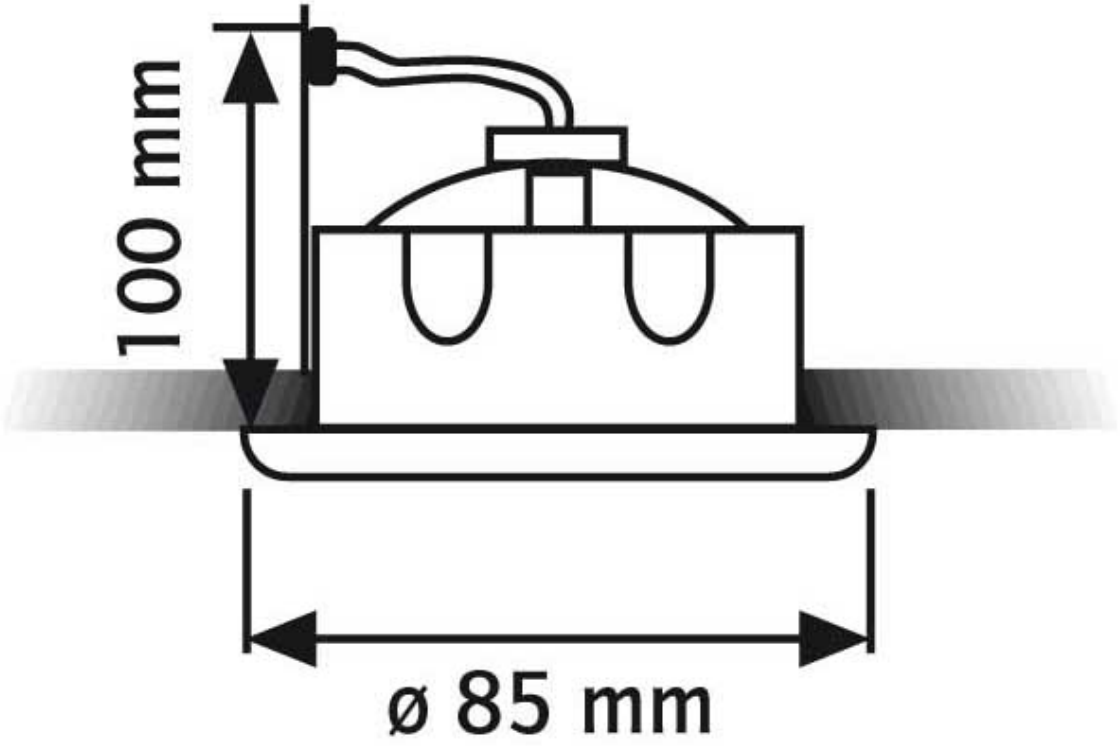
TECHNICAL DRAWING