rutec Licht GmbH & Co. KG | Carl-Zeiss-Str. 15 | 28857 Syke

TEL +49 (0) 42 42 95 65 - 0 | FAX +49 (0) 42 42 95 65 - 25 | E-MAIL INFO@RUTEC.DE | WWW.RUTEC.DE

starr 1, 4401 X5CrNiMo 316 MR11 Tulka Edelst.V4Am.Clipver.IP55

Article nr.: R5564-V4A

Fixed, Without Snap-Ring, IP55 V4A Stainless · Steel, Round for 35 mm Light Bulb · Indoor and Outdoor Use Also Usable for Installation In Concrete Ceilings and · Other Thermally Difficult Mounting Locations. As Well As for Use In Moist Rooms · and Suitable for Sea Air Areas. · Housing and Cover Ring Made Out of V4A Stainless Steel. · Light Bulb Replacement By Removing the Inner Ring (Clip Fastener). · Tempered Clear Glass with IP55 Protection for Installation in Ceilings. · Excluding: Light Bulb · without low-voltage socket art.-no .: 55004 (SKIII)

TECHNICAL DATA

Unit Code	pcs
BAR code	4012094556406
Housing colour	Edelstahl
Height	27.00 mm
Outer diameter	63 mm
Hole size	45 mm
Lamp	without
IP rating	55
Power	1-35 W
Lamp base	ohne

rutec Licht GmbH & Co. KG | Carl-Zeiss-Str. 15 | 28857 Syke

TEL +49 (0) 42 42 95 65 - 0 | FAX +49 (0) 42 42 95 65 - 25 | E-MAIL INFO@RUTEC.DE | WWW.RUTEC.DE

starr 1, 4401 X5CrNiMo 316 MR11 Tulka Edelst.V4Am.Clipver.IP55

Article nr.: R5564-V4A

TECHNICAL DATA

Amount of LED	1
Material	Edelstahl
Temperature range	-20 - 100
Suitable light source	

rutec Licht GmbH & Co. KG | Carl-Zeiss-Str. 15 | 28857 Syke

TEL +49 (0) 42 42 95 65 - 0 | FAX +49 (0) 42 42 95 65 - 25 | E-MAIL INFO@RUTEC.DE | WWW.RUTEC.DE

starr 1, 4401 X5CrNiMo 316 MR11 Tulka Edelst.V4Am.Clipver.IP55

Article nr.: R5564-V4A
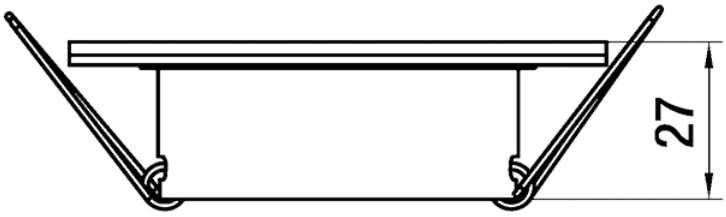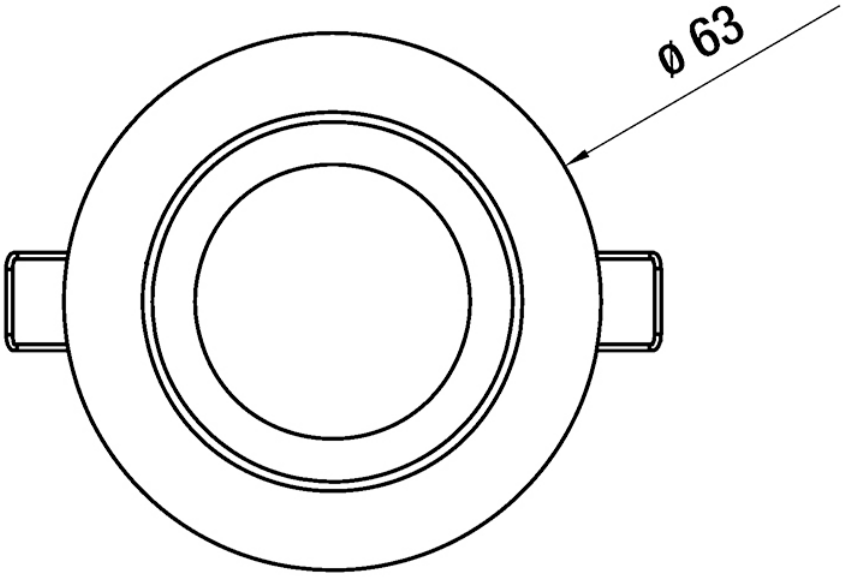
TECHNICAL DRAWING