rutec Licht GmbH & Co. KG | Carl-Zeiss-Str. 15 | 28857 Syke

TEL +49 (0) 42 42 95 65 - 0 | FAX +49 (0) 42 42 95 65 - 25 | E-MAIL INFO@RUTEC.DE | WWW.RUTEC.DE

starr 1, 4401 X5CrNiMo 316 MR11 Tulka Edelst.V4Am.Clipver.Eckig IP55

Article nr.: R5563-V4A

Fixed, Without Snap-Ring, IP55 V4A Stainless · Steel, Round for 35 mm Light Bulb · Indoor and Outdoor Use Also Usable for Installation In Concrete Ceilings and · Other Thermally Difficult Mounting Locations. As Well As for Use In Moist Rooms · and Suitable for Sea Air Areas. · Housing and Cover Ring Made Out of V4A Stainless Steel. · Light Bulb Replacement By Removing the Inner Ring (Clip Fastener). · Tempered Clear Glass with IP55 Protection for Installation in Ceilings. · Excluding: Light Bulb · without low-voltage socket art.-no .: 55004 (SKIII) · SECONDLIFE ITEM -heavily discounted- only while stocks last!

TECHNICAL DATA

Unit Code	pcs
BAR code	4012094556307
Housing colour	Edelstahl
Length	63.00 mm
Width	63.00 mm
Height	27.00 mm
Hole size	45 mm
Lamp	without
IP rating	55
Power	1-35 W

rutec Licht GmbH & Co. KG | Carl-Zeiss-Str. 15 | 28857 Syke

TEL +49 (0) 42 42 95 65 - 0 | FAX +49 (0) 42 42 95 65 - 25 | E-MAIL INFO@RUTEC.DE | WWW.RUTEC.DE

starr 1, 4401 X5CrNiMo 316 MR11 Tulka Edelst.V4Am.Clipver.Eckig IP55

Article nr.: R5563-V4A

TECHNICAL DATA

Lamp base	ohne
Amount of LED	1
Material	Edelstahl
Temperature range	-20 - 100
Suitable light source	

rutec Licht GmbH & Co. KG | Carl-Zeiss-Str. 15 | 28857 Syke

TEL +49 (0) 42 42 95 65 - 0 | FAX +49 (0) 42 42 95 65 - 25 | E-MAIL INFO@RUTEC.DE | WWW.RUTEC.DE

starr 1, 4401 X5CrNiMo 316 MR11 Tulka Edelst.V4Am.Clipver.Eckig IP55

Article nr.: R5563-V4A
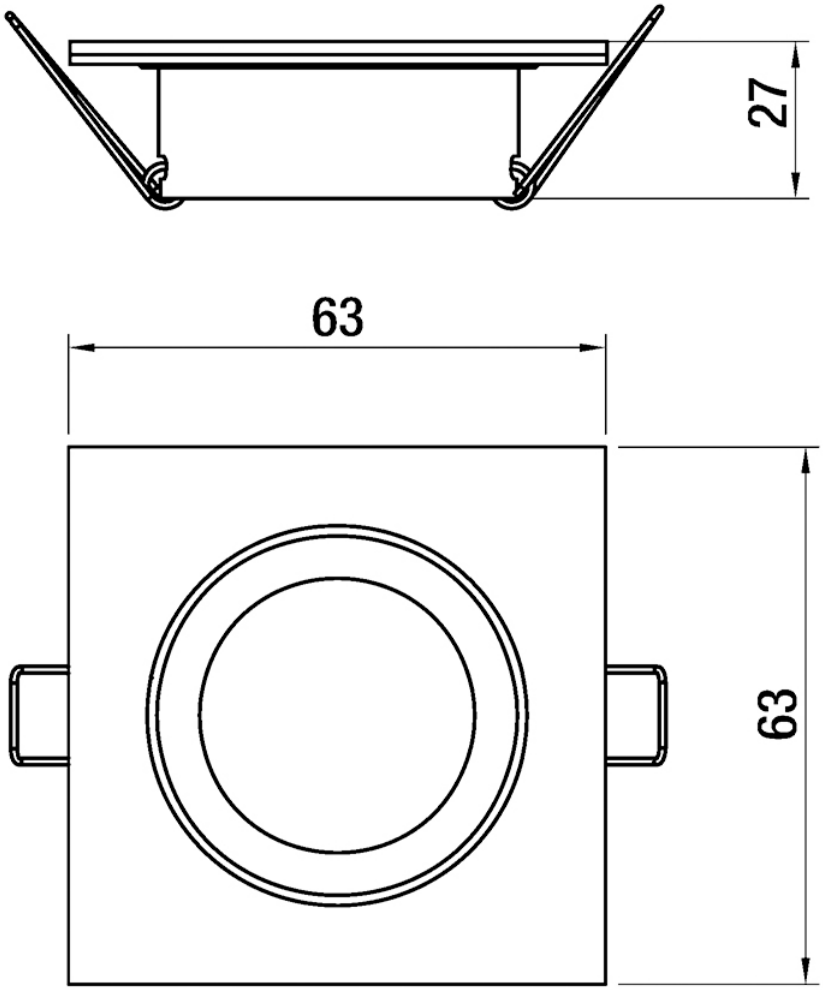
TECHNICAL DRAWING