rutec Licht GmbH & Co. KG | Carl-Zeiss-Str. 15 | 28857 Syke

TEL +49 (0) 42 42 95 65 - 0 | FAX +49 (0) 42 42 95 65 - 25 | E-MAIL INFO@RUTEC.DE | WWW.RUTEC.DE

Secondlife-Shop

starr - chrom - for JC Druckguss Einbaustr.IP43

Article nr.: 55904

SECONDLIFE ITEM -heavily discounted- only while stocks last!

TECHNICAL DATA

Unit Code	pcs
BAR code	4012094499048
Housing colour	Chrom
Height	65.00 mm
Outer diameter	119 mm
Hole size	102 mm
Depth in ceiling	85.00 mm
Lamp	without
IP rating	43
Power	1-50 W

rutec Licht GmbH & Co. KG | Carl-Zeiss-Str. 15 | 28857 Syke

TEL +49 (0) 42 42 95 65 - 0 | FAX +49 (0) 42 42 95 65 - 25 | E-MAIL INFO@RUTEC.DE | WWW.RUTEC.DE

Secondlife-Shop

starr - chrom - for JC Druckguss Einbaustr.IP43

Article nr.: 55904

TECHNICAL DATA

Lamp base	GY6,35
Amount of LED	1
Material	Aluminium
Suitable light source	

rutec Licht GmbH & Co. KG | Carl-Zeiss-Str. 15 | 28857 Syke
TEL +49 (0) 42 42 95 65 - 0 | FAX +49 (0) 42 42 95 65 - 25 | E-MAIL INFO@RUTEC.DE | WWW.RUTEC.DE

Secondlife-Shop

starr - chrom - for JC Druckguss Einbaustr.IP43

Article nr.: 55904
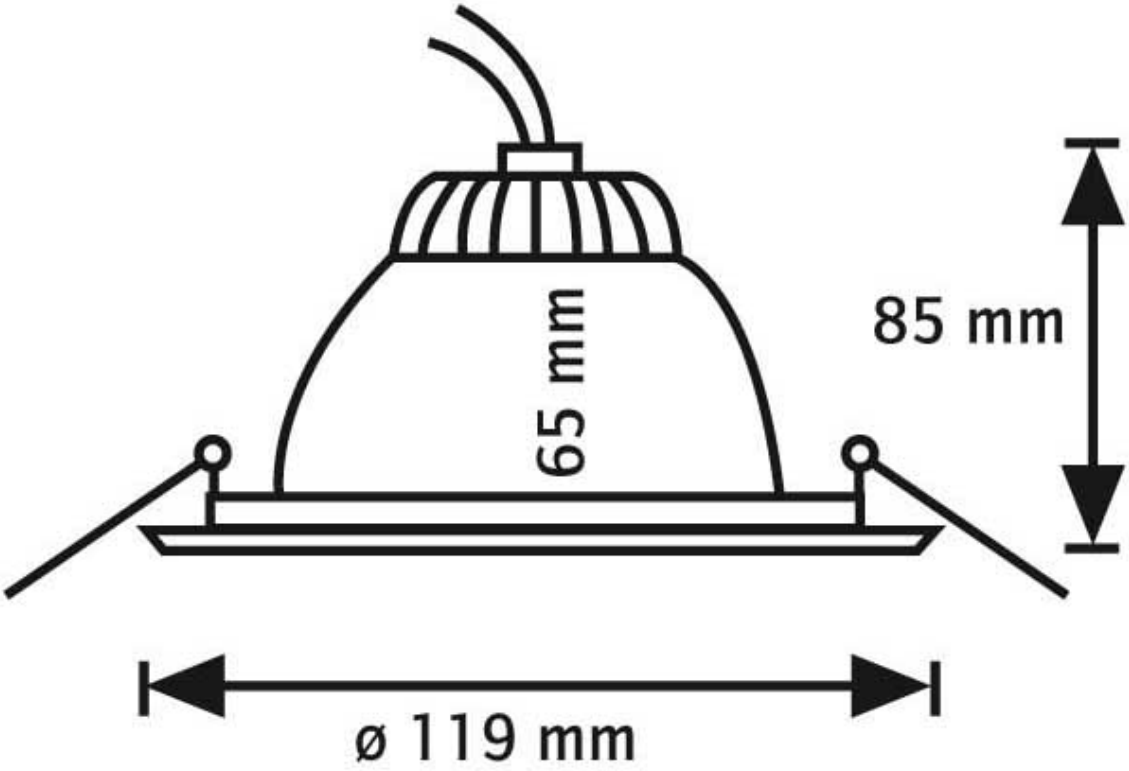
TECHNICAL DRAWING