rutec Licht GmbH & Co. KG | Carl-Zeiss-Str. 15 | 28857 Syke

TEL +49 (0) 42 42 95 65 - 0 | FAX +49 (0) 42 42 95 65 - 25 | E-MAIL INFO@RUTEC.DE | WWW.RUTEC.DE

starr 1, 4401 X5CrNiMo 316 MR11 Tulka Edelst.V4Am.Clipver.IP55 weiss

Article nr.: R55641-M

Fixed, Without Snap-Ring, IP55 V4A stainless steel, white · Round for 35 mm Light Bulb · Indoor and Outdoor Use Also Usable for Installation In Concrete Ceilings and · Other Thermally Difficult Mounting Locations. As Well As for Use In Moist Rooms · and Suitable for Sea Air Areas. · Housing and Cover Ring Made Out of V4A Stainless Steel. · Light Bulb Replacement By Removing the Inner Ring (Clip Fastener). · Tempered Clear Glass with IP55 Protection for Installation in Ceilings. · Excluding: Light Bulb · without low-voltage socket art.-no .: 55004 (SKIII)

TECHNICAL DATA

Unit Code	pcs
BAR code	4012094246413
Housing colour	Weiss matt
Height	27.00 mm
Outer diameter	63 mm
Hole size	45 mm
Lamp	without
IP rating	55
Power	1-35 W
Lamp base	ohne

rutec Licht GmbH & Co. KG | Carl-Zeiss-Str. 15 | 28857 Syke

TEL +49 (0) 42 42 95 65 - 0 | FAX +49 (0) 42 42 95 65 - 25 | E-MAIL INFO@RUTEC.DE | WWW.RUTEC.DE

starr 1, 4401 X5CrNiMo 316 MR11 Tulka Edelst.V4Am.Clipver.IP55 weiss

Article nr.: R55641-M

TECHNICAL DATA

Amount of LED	1
Material	Edelstahl
Temperature range	-20 - 100
Suitable light source	

rutec Licht GmbH & Co. KG | Carl-Zeiss-Str. 15 | 28857 Syke

TEL +49 (0) 42 42 95 65 - 0 | FAX +49 (0) 42 42 95 65 - 25 | E-MAIL INFO@RUTEC.DE | WWW.RUTEC.DE

starr 1, 4401 X5CrNiMo 316 MR11 Tulka Edelst.V4Am.Clipver.IP55 weiss

Article nr.: R55641-M
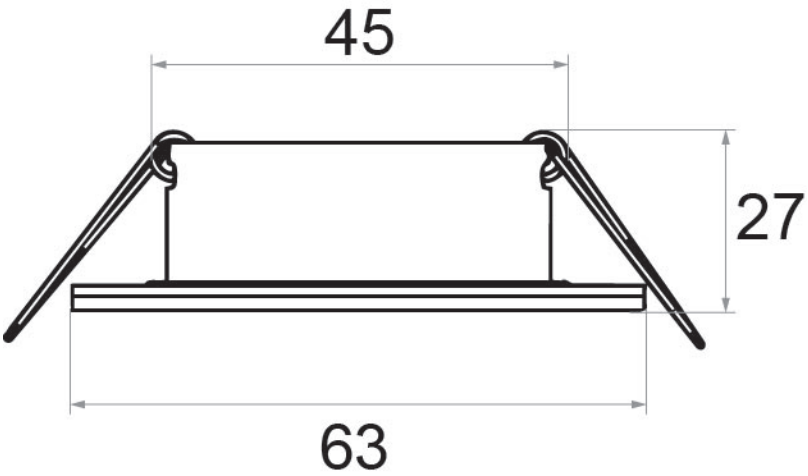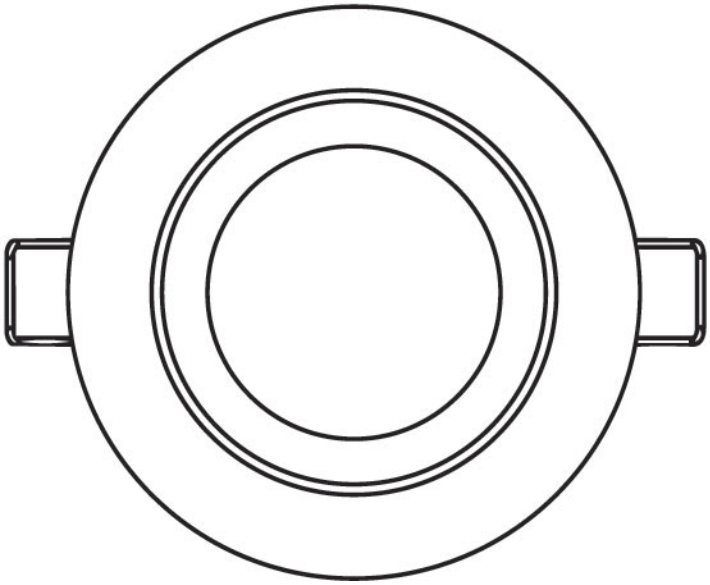
TECHNICAL DRAWING