rutec Licht GmbH & Co. KG | Carl-Zeiss-Str. 15 | 28857 Syke

TEL +49 (0) 42 42 95 65 - 0 | FAX +49 (0) 42 42 95 65 - 25 | E-MAIL INFO@RUTEC.DE | WWW.RUTEC.DE

VARDAflex 3inONE-30 - 5 Meter Rolle Flex.LED Strip, 24V, Innen, RGB

Article nr.: 86575

flexible LED Strip with self adhesive backside, · for indoor use. · · Can be seperated every 166.7 mm or 5 LEDs · Number of LEDs: 150 · LED pitch: 33.33 mm · beam angle: 120° · CRI: · Lumen per meter: 238 lm · Voltage: 24V DC · Power per meter: 7,2 W · Lifetime L70B50: >= 69.000 h · LxWxH in mm: 5.000 x 10 x 2,2 · · Easy installation with solderless connector (optional) · Maximum length per connection: 10 meter. New connectors for greater length. · Delivery contents: 5 meter roll, 5 power supply connector profi, · 1 direct connector profi

TECHNICAL DATA

Unit Code	pcs
BAR code	4012094865751
Housing colour	ohne
Length	5000.00 mm
Width	10.00 mm
Height	2.20 mm
LED colour	RGB
Lightoutput per fixture	1190.00 lm
Lightoutput per LED	7.92 lm
Lamp	Inklusive LED

rutec Licht GmbH & Co. KG | Carl-Zeiss-Str. 15 | 28857 Syke

TEL +49 (0) 42 42 95 65 - 0 | FAX +49 (0) 42 42 95 65 - 25 | E-MAIL INFO@RUTEC.DE | WWW.RUTEC.DE

VARDAflex 3inONE-30 - 5 Meter Rolle Flex.LED Strip, 24V, Innen, RGB

Article nr.: 86575

TECHNICAL DATA

IP rating	20
Power	36 W
Psb	0,00 W
Current mA	1.500 mA
Voltage	24 V
Amount of LED	150
Material	Kunststoff
Temperature range	-20 - 45
LED per meter	30
Dimension of segments	166.70 mm
Lifetime L70B50	69.000 h

rutec Licht GmbH & Co. KG | Carl-Zeiss-Str. 15 | 28857 Syke

TEL +49 (0) 42 42 95 65 - 0 | FAX +49 (0) 42 42 95 65 - 25 | E-MAIL INFO@RUTEC.DE | WWW.RUTEC.DE

VARDAflex 3inONE-30 - 5 Meter Rolle Flex.LED Strip, 24V, Innen, RGB

Article nr.: 86575
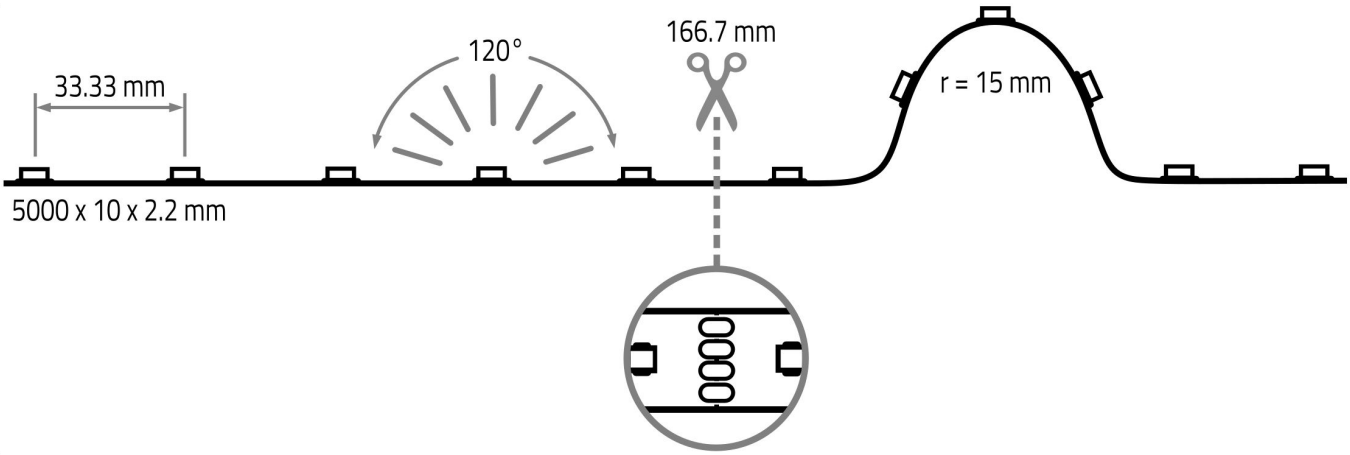
TECHNICAL DRAWING