rutec Licht GmbH & Co. KG | Carl-Zeiss-Str. 15 | 28857 Syke

TEL +49 (0) 42 42 95 65 - 0 | FAX +49 (0) 42 42 95 65 - 25 | E-MAIL INFO@RUTEC.DE | WWW.RUTEC.DE

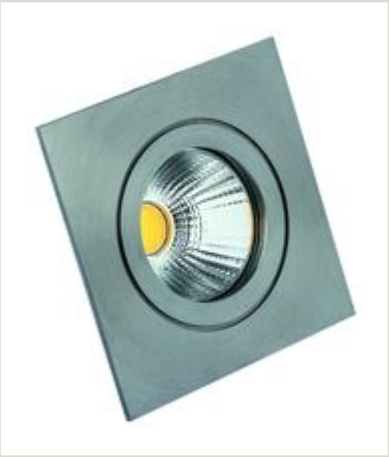

TULKA starr 1, 4401 X5CrNiMo 316 LED Einbaustr. 8W IP55 Eckig o.Konverter

Article nr.: R5766V4AUWWOK

for indoor- and outdoor use, IP 55 · · housing: V4A stainless steel, glass reflector, protective glass · housing color: stainless steel · not swiveling · beam angle: 25° · power: 8 W · light color: 2700 K · luminous flux: 738 lm · CRI: >80 · lifetime L70B50: >= 54.000 h · input: 350 mA DC · protection class III · · installation depth: 55 mm · ceiling cut-out: 68 mm · outer dimensions: 82 x 82 mm · energie efficiency class: F · not included LED converter

TECHNICAL DATA

Unit Code	pcs
BAR code	4012094476605
Housing colour	Edelstahl
Length	82.00 mm
Width	82.00 mm
Height	44.00 mm
Hole size	68 mm
Depth in ceiling	55.00 mm
LED colour	ca. 2700K ultra warmweiß
Lightoutput per fixture	738.00 lm

rutec Licht GmbH & Co. KG | Carl-Zeiss-Str. 15 | 28857 Syke

TEL +49 (0) 42 42 95 65 - 0 | FAX +49 (0) 42 42 95 65 - 25 | E-MAIL INFO@RUTEC.DE | WWW.RUTEC.DE

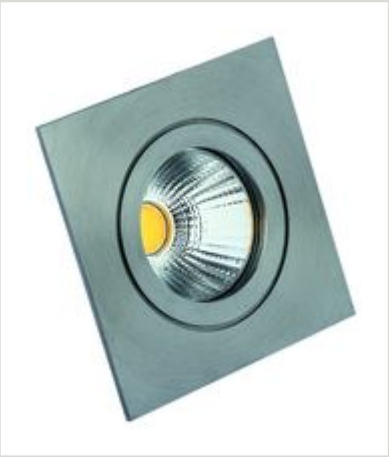

TULKA starr 1, 4401 X5CrNiMo 316 LED Einbaustr. 8W IP55 Eckig o.Konverter

Article nr.: R5766V4AUWWOK

TECHNICAL DATA

Lamp	Inklusive LED
IP rating	55
Power	8 W
Current mA	350 mA
Lamp base	ohne
Amount of LED	1
Material	Edelstahl
Temperature range	-20 - 40
Energy ffficiency class	EEK-Label_F
CRI	≥ 80
Lifetime L70B50	54.000 h

rutec Licht GmbH & Co. KG | Carl-Zeiss-Str. 15 | 28857 Syke

TEL +49 (0) 42 42 95 65 - 0 | FAX +49 (0) 42 42 95 65 - 25 | E-MAIL INFO@RUTEC.DE | WWW.RUTEC.DE

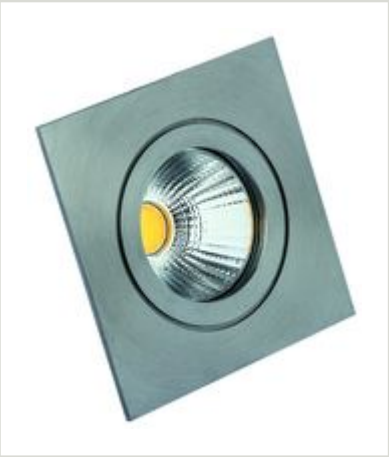

TULKA starr 1, 4401 X5CrNiMo 316 LED Einbaustr. 8W IP55 Eckig o.Konverter

Article nr.: R5766V4AUWWOK
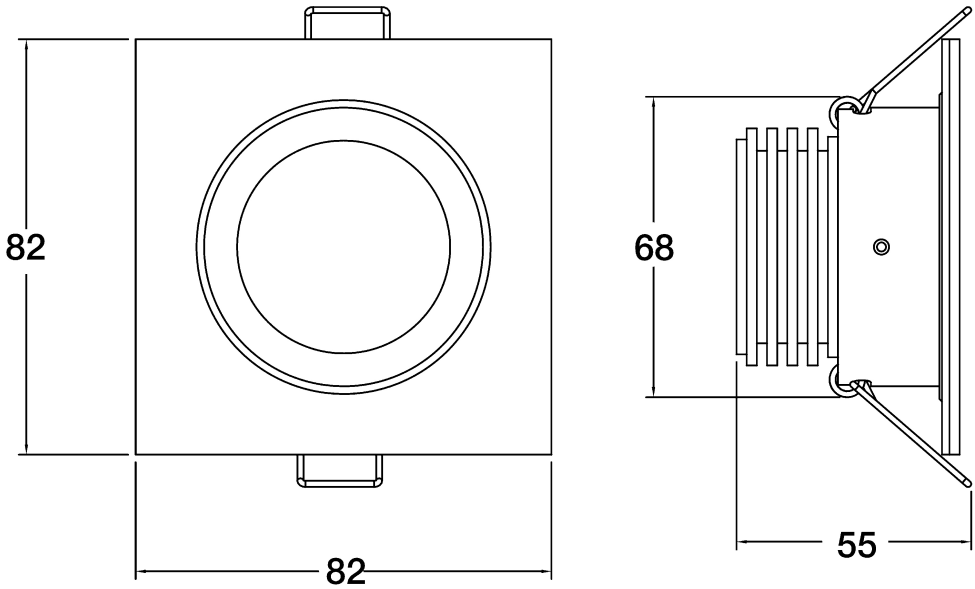
TECHNICAL DRAWING