rutec Licht GmbH & Co. KG | Carl-Zeiss-Str. 15 | 28857 Syke

TEL +49 (0) 42 42 95 65 - 0 | FAX +49 (0) 42 42 95 65 - 25 | E-MAIL INFO@RUTEC.DE | WWW.RUTEC.DE

3000K 25° 350mA CRI90 m.Scheibe LED Einbaustr. 8W chrommatt.m.Konv.dim

Article nr.: ALU57359WWD

for indoor use, IP 20 · · housing: diecast aluminum, glass reflector, protective glass · housing color: chrome matt · 30 ° adjustable · beam angle: 25° · power: 8 W · light color: 3000 K · luminous flux: 733 lm · CRI: >90 · lifespan L70B50: >= 50,000 h · input: 350 mA DC · protection class III, MM · · installation depth: 40 mm · ceiling cut-out: 68 mm · outer diameter: 82 mm · including LED converter dimmable via tronic dimmer · this product contains a light source of energy efficiency class F

TECHNICAL DATA

Unit Code	pcs
BAR code	4012094373591
Housing colour	Chrom matt
Outer diameter	82 mm
Hole size	68 mm
Depth in ceiling	40.00 mm
LED colour	ca. 3000K warmweiß
Lightoutput per fixture	733.00 lm
Lamp	Inklusive LED
IP rating	20

rutec Licht GmbH & Co. KG | Carl-Zeiss-Str. 15 | 28857 Syke

TEL +49 (0) 42 42 95 65 - 0 | FAX +49 (0) 42 42 95 65 - 25 | E-MAIL INFO@RUTEC.DE | WWW.RUTEC.DE

3000K 25° 350mA CRI90 m.Scheibe LED Einbaustr. 8W chrommatt.m.Konv.dim

Article nr.: ALU57359WWD

TECHNICAL DATA

Power	8 W
Current mA	350 mA
Lamp base	ohne
Amount of LED	1
Material	Aluminium
Temperature range	-20 - 40
CRI	≥ 90
Lifetime L70B50	50.000 h

rutec Licht GmbH & Co. KG | Carl-Zeiss-Str. 15 | 28857 Syke

TEL +49 (0) 42 42 95 65 - 0 | FAX +49 (0) 42 42 95 65 - 25 | E-MAIL INFO@RUTEC.DE | WWW.RUTEC.DE

3000K 25° 350mA CRI90 m.Scheibe LED Einbaustr. 8W chrommatt.m.Konv.dim

Article nr.: ALU57359WWD
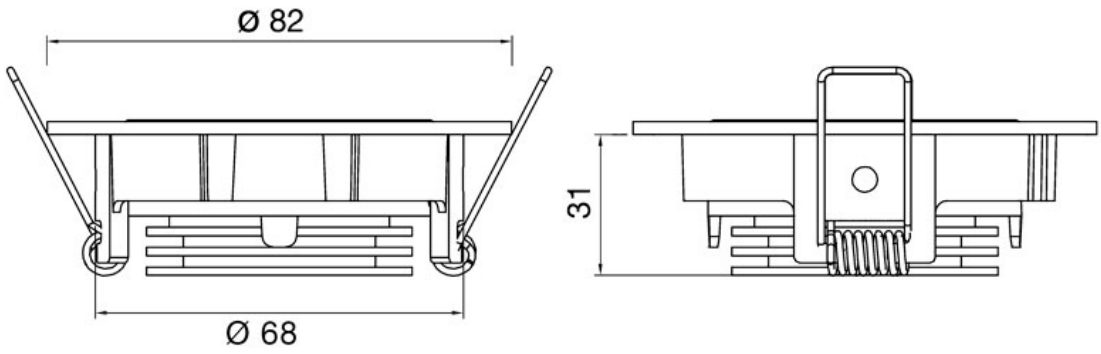
TECHNICAL DRAWING